Stûv B-100H SF | The stove

Enjoyment of the fire	Double burner Wood burner
Aesthetics and easy integration	Choice of interiors (pebbles, ceramic logs, glass back or cast iron back)
	A range of steel finishes, Piet Boon or Undercover frames (in resin resistant to high temperatures)
Ease of use	Option to turn on 1 or 2 burners and set the height of the flame
	Standard remote control Optional mobile app
Energy saving	Eco wave programme that cycles gas supply levels

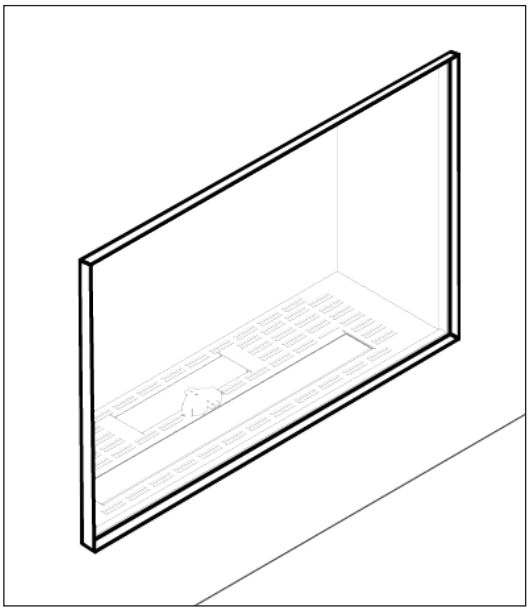

TECHNICAL OVERVIEW

GENERAL	
TYPE OF STOVE	C11 / C31
MATERIALS	steel
COLOUR	anthracite
FUEL	Natural gas / Propane

WEIGHT / SIZE	
WEIGHT	160 kg
Ø OF SMOKE FLUE OUTLET	130-200 mm

ACCESSORIES / EQUIPMENT	
REMOTE CONTROL	✓
HANDSET WIFI	O
'WOOD BURNER'	✓
CONVECTION CASING	O
BACK PANEL	
· BLACK STEEL	✓
· BLACK GLASS	O
· PIET BOON IRON STRIPS	O
DECORATIVE OPTIONS	
· SET OF LOGS	✓
· ANTHRACITE STONES	O
· WHITE STONES	O
ANTI-REFLECTIVE GLASS	O
AC 220V ADAPTOR	✓

LEGEND	
✓	YES
O	OPTION

Conforms to the standard EN 613:2000

Stûv B-100H SF | Technical specifications

TYPE C11 / C31

GAS TYPE		**G20** I2H, I2E, I2E+	**G20 / G25** I2ELL	**G25.3** I2EK	**G31** I3P (30)	**G31** I3P (37)	**G31** I3P (50)
SUPPLY PRESSURE	mbar	20	20	25	30	37	50
NOMINAL HEAT INPUT GROSS (HS)	kW	12	12	11,4	8,8	8,8	8,8
OUTPUT	kW	8,5	8,5	8,5	6,9	6,9	6,9
CONSUMPTION	m³/h	1,17	1,17	1,2	/	/	/
CONSUMPTION	Kg/h	/	/	/	0,606	0,606	0,606
BURNER PRESSURE (HOT)	mbar	13,5	13,5	17	15,7	15,7	15,7
INJECTOR MARKING		480 (7 holes)	480 (7 holes)	480 (7 holes)	180 (7 holes)	180 (7 holes)	180 (7 holes)
PILOT		0.160.032-51	0.160.032-51	0.160.032-51	0.160.032-30	0.160.032-30	0.160.032-30
EFFICIENCY CLASS*		2	2	2	1	1	1
Nox CLASS		4	4	4	4	4	4
ENERGY EFFICIENCY INDEX (EEI)		77	77	77	83,4	83,4	83,4
ENERGY EFFICIENCY CLASS		C	C	C	B	B	B

* Class 1: efficiency over 82%. Class 2: efficiency between 65% and 82%.

Stûv B-100H SF | Dimensions

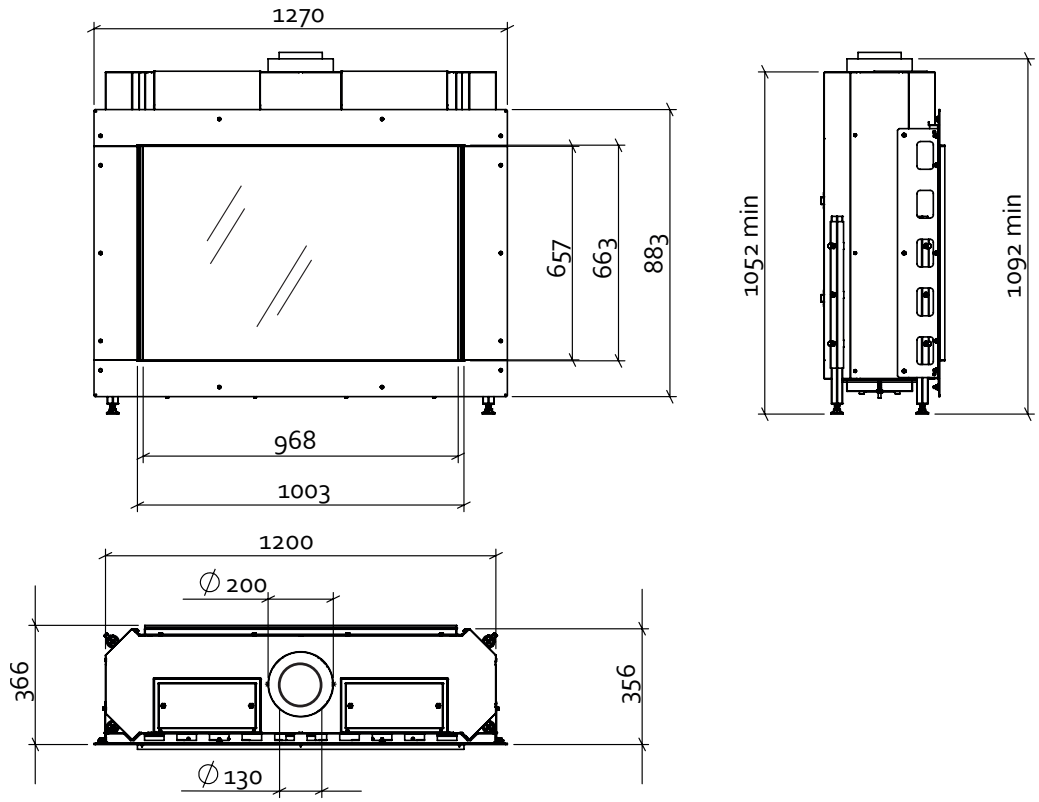

Fireplace Under-Cover UC 100 H

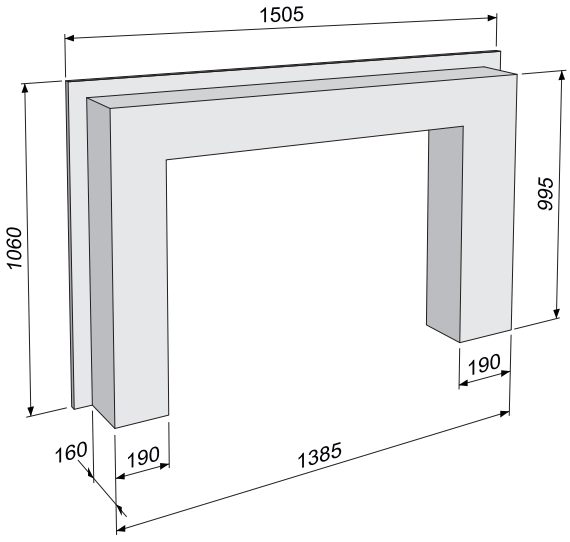

Stûv B-100H PB | Dimensions

Piet Boon version

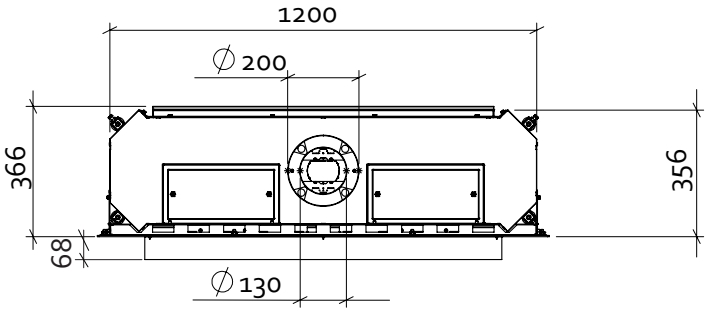

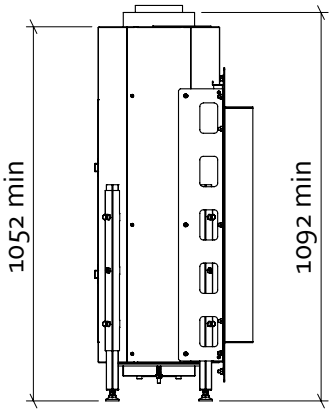

Frame Piet Boon for Stûv B-100H

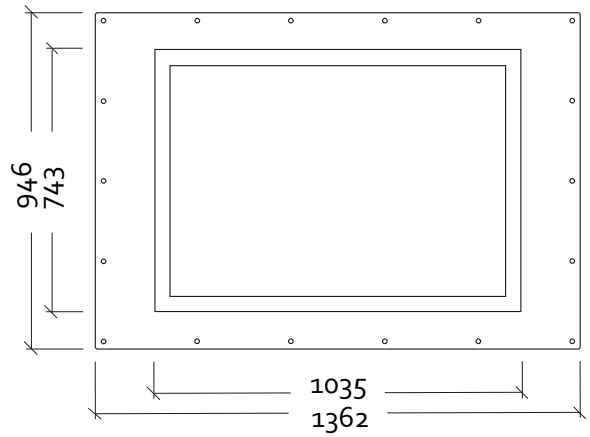

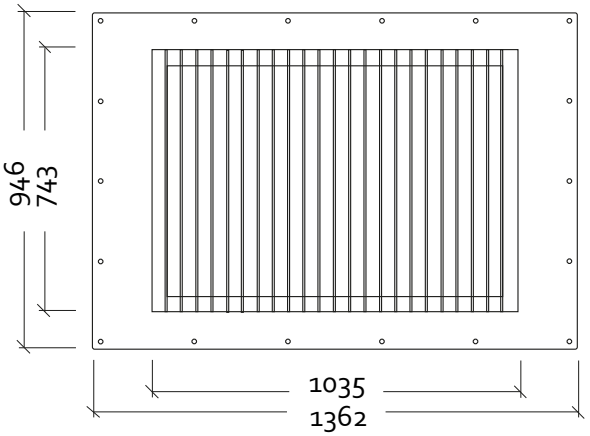

Stûv Gas fire | Accessories

CONVECTION CASING

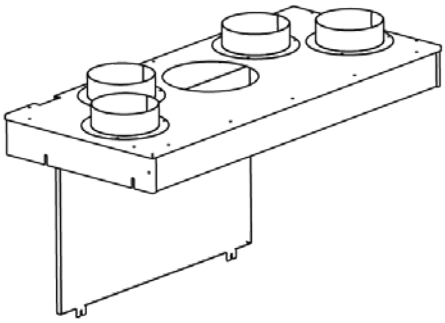

TRAPDOOR

AC ADAPTER 220V

REMOTE CONTROL

WIFI HANDSET

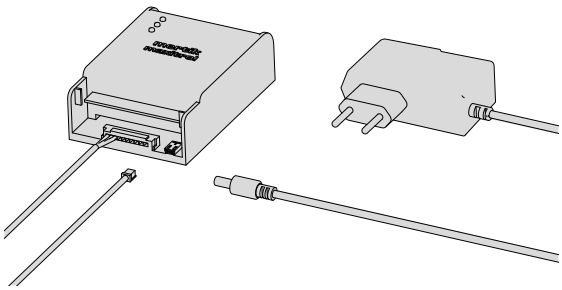

HOME AUTOMATION CABLE

ANTI-REFLECTIVE GLASS

Stûv Gas fire | Accessories

DIMENSIONS INSPECTION PANEL (STEEL)

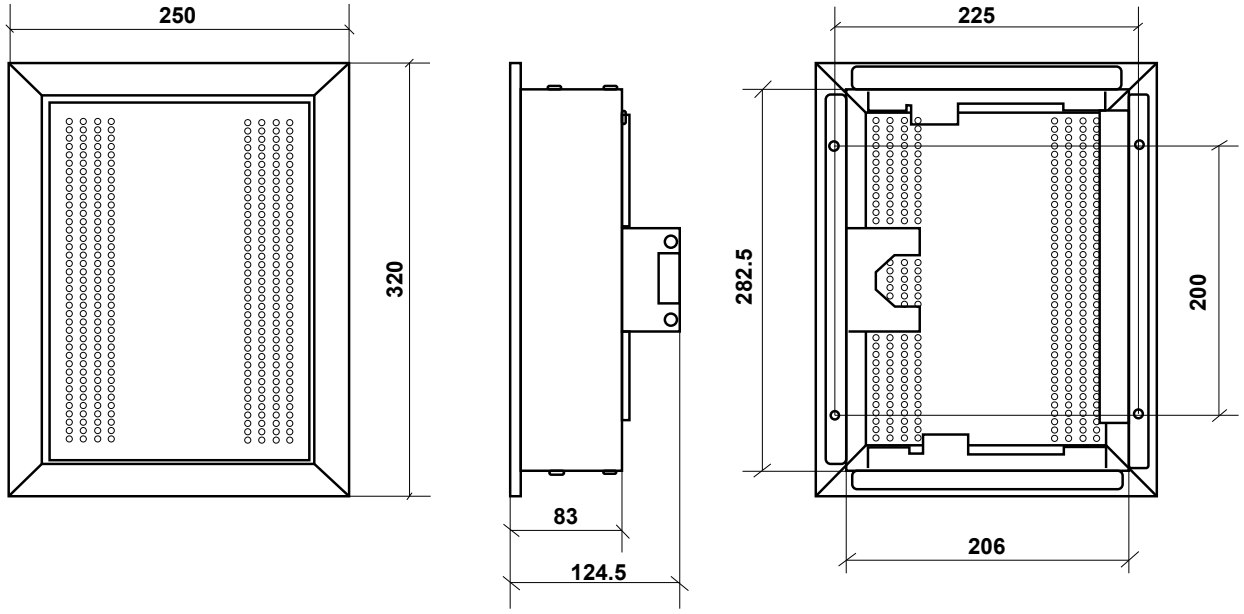

DIMENSIONS INSPECTION PANEL (UNDERCOVER)

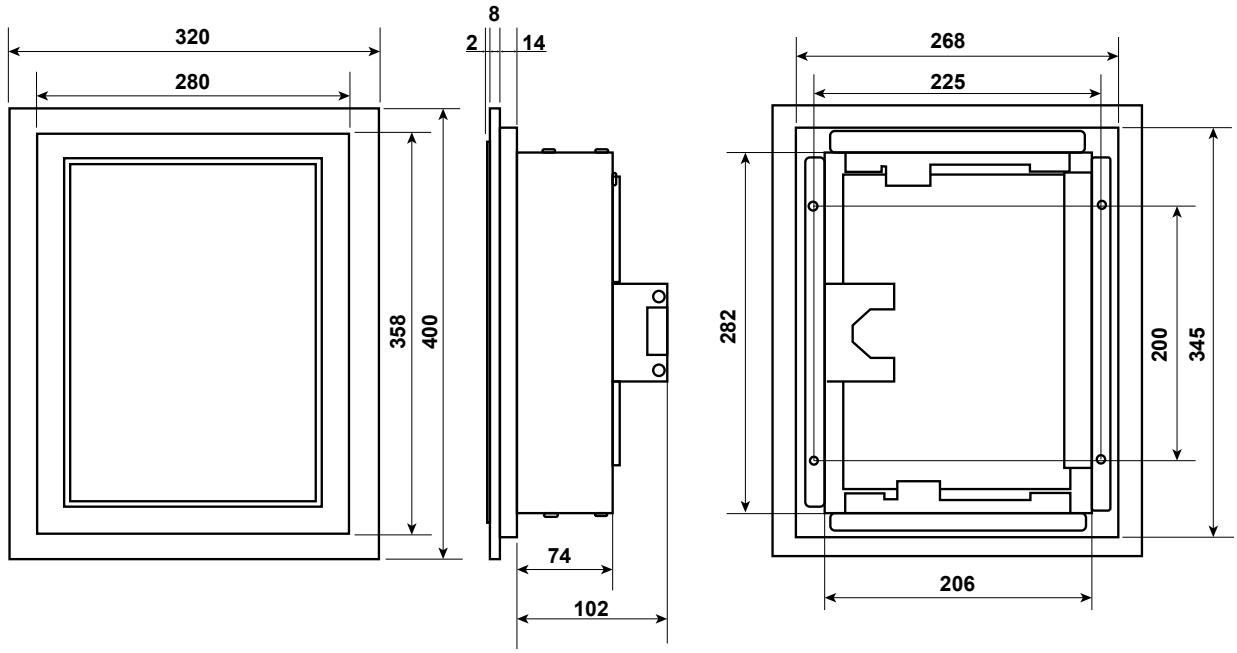

Stûv Gas fire | Mode of operation

· Stûv gas fires are designed to be connected to a concentric stainless steel balanced flue system. The fires are room sealed and take the oxygen required for combustion through the outer wall of the flue system. The heat from the products of combustion being expelled by the centre pipe warms the incoming air in the outer pipe too.

· Stûv gas fires are able to be ordered for LPG too, please specify this with your retailer at point of order. The flame visuals, output and efficiency are different when using LPG.

· Stûv gas fires can be installed with an optional convection casing which can be used to caputure and channel the convected heat.